THIS DRAWING AND INFORMATION CONTAINED THEREIN ARE THE PROPERTY OF UBE INDUSTRIES, LTD. AND MAY NOT BE USED WITHOUT THE WRITTEN CONSENT OF UBE

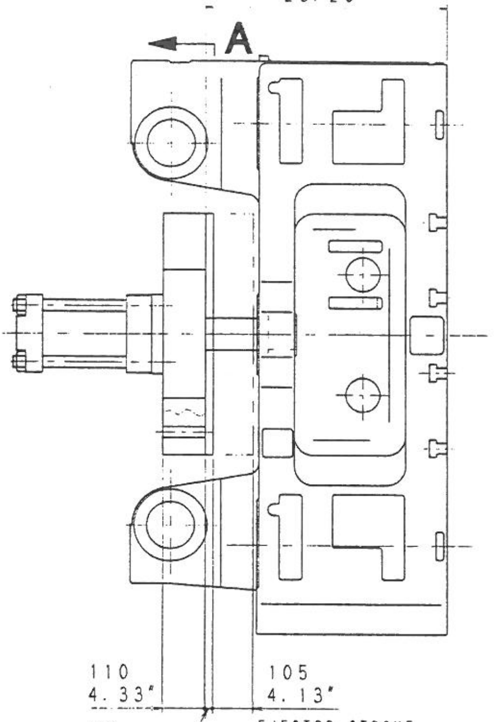

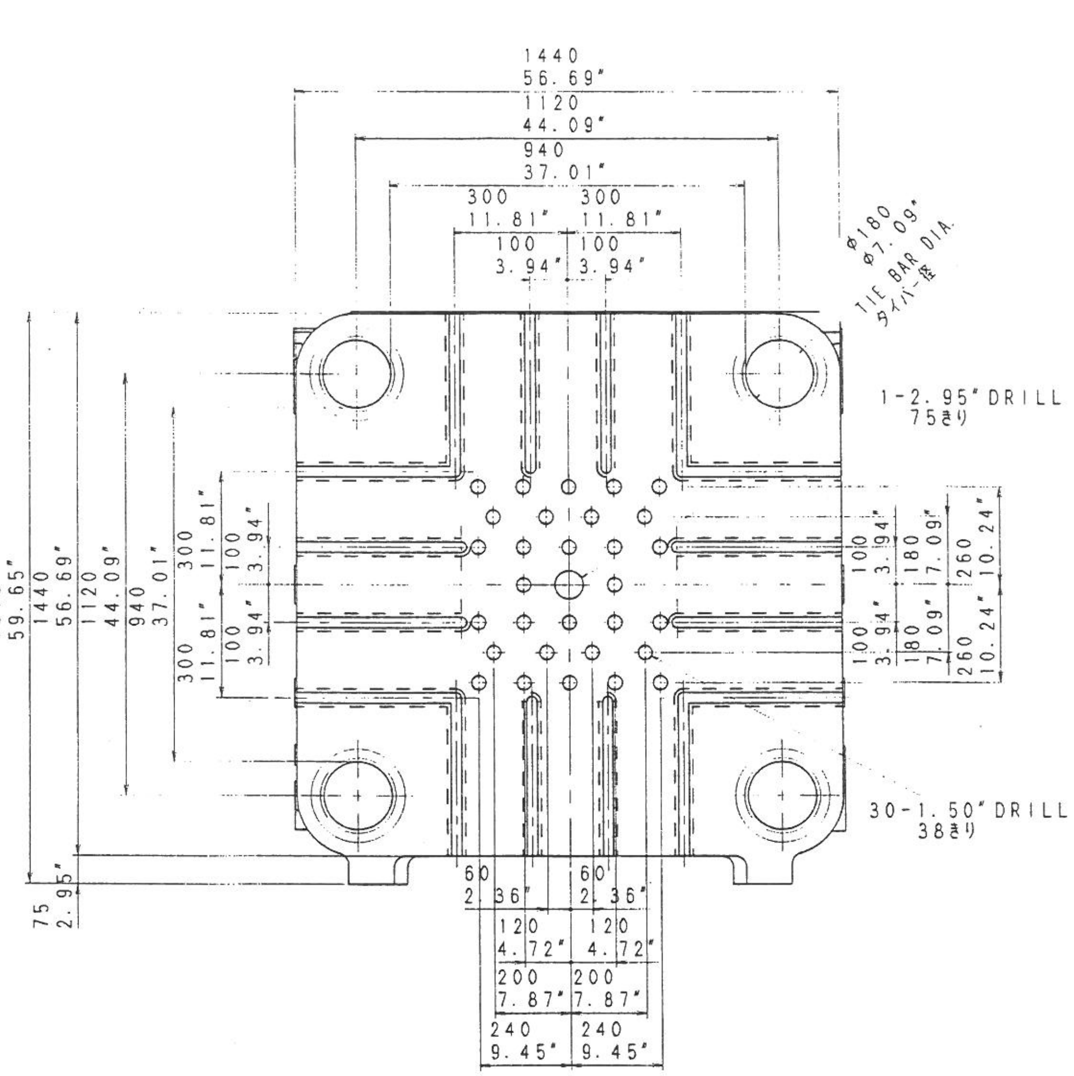

MOVING PLATEN
ムービングプラテン

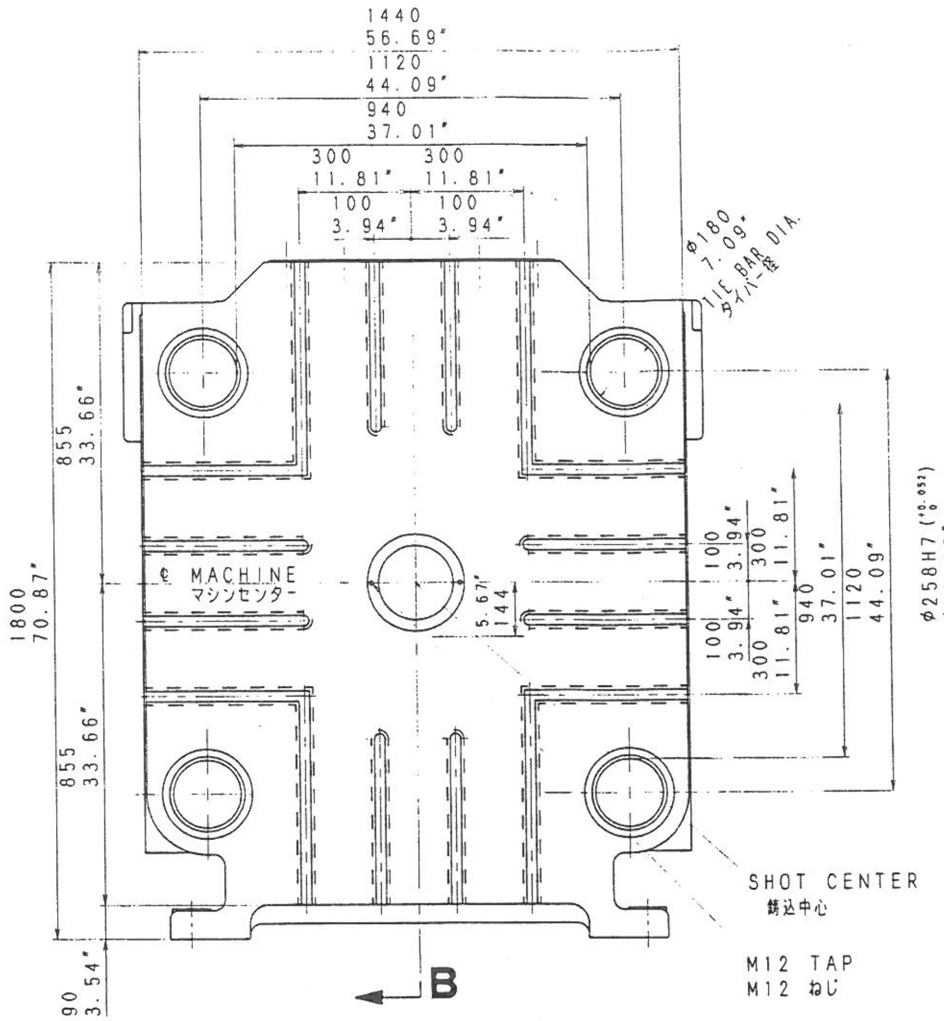

STATIONALY PLATEN
ステーショナリプラテン

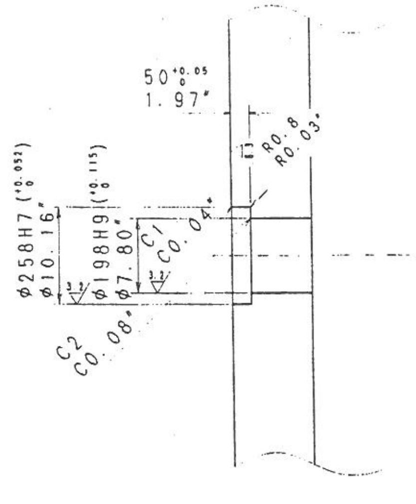

B - (1:5)

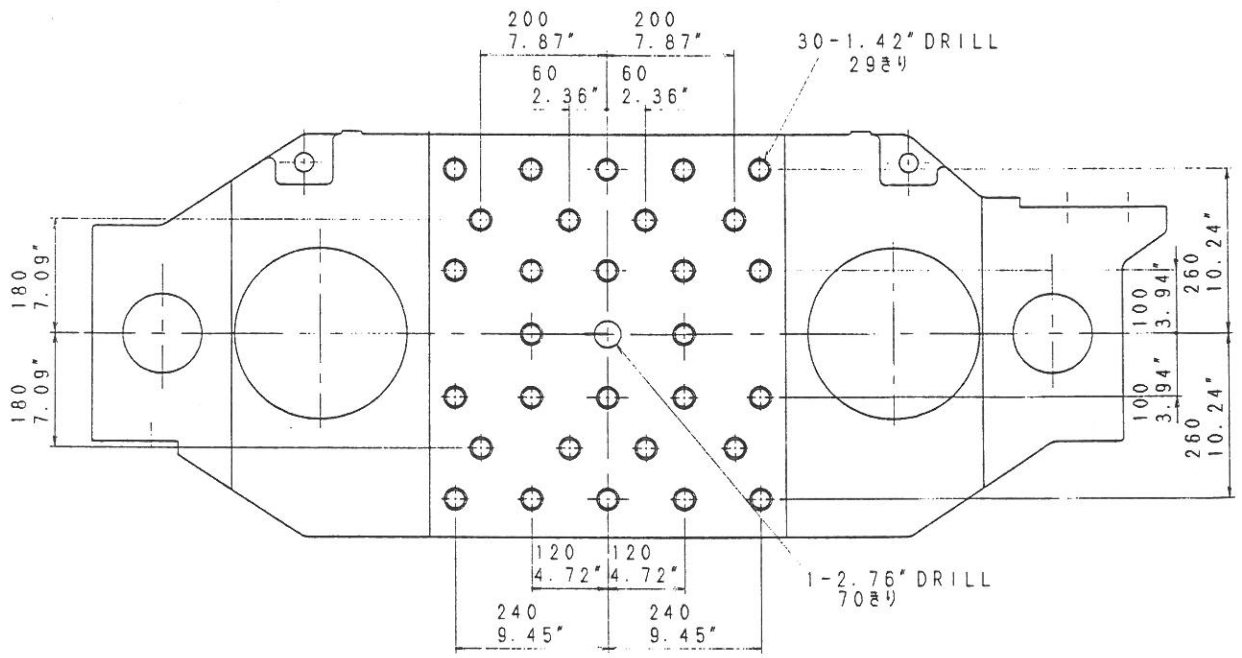

A - (1:6)

FROM DIE MOUNTING SURFACE
金型取付面より

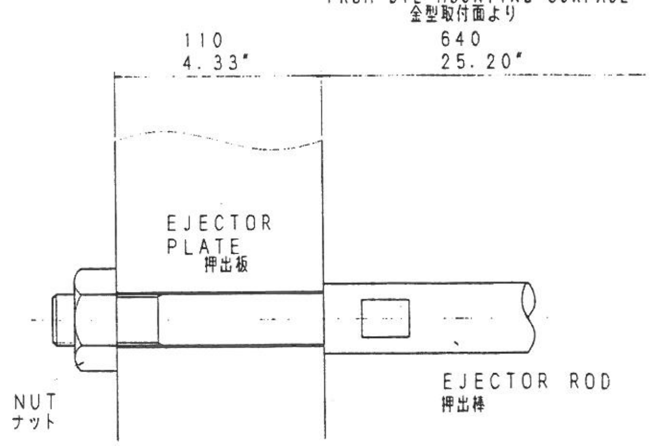

EJECTOR ROD CAN BE CONNECTED TO EJECTOR PLATE WITH NUT
押出棒はナットで押出板と連結可能です。

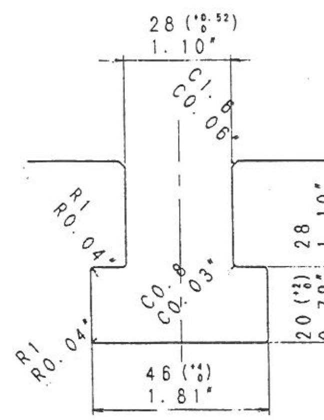

DETAIL OF T-SLOT
T溝詳細 (1:1)

FMC

	ORDER NO.	NO OF COMPL ASSY	DAI NO.	CHU NO.	SHO NO.	CUSTOMER	TOTAL PCS MFD	DSGND / CODE	DATE	APPVD	DATE
3							×				
2							×				
1	81807	1		00	00	Messrs/HMT	×1	S. U / 481	97 0828	M. K	97 0828

DELETED MARK (X)	REV NO.	DESCRIPTION	DSGND	DATE	APPVD	DATE

		DATE
SCALE	1:10, 1:6	
DRAWN	H. OHI (G)	970828
DSGND	S. UENO	970828
CHKD	I. ISHIKAWA	970828
APPVD	M. KURIYAMA	970828

UB800GHⅡ DIE CASTING MAHINE
UB800GHⅡ ダイカストマシン

DIE MOUNTING DIMENSIONS
金型取付関係寸法図

ASSY DWG NO	
ORIG DWG NO.	181-00680:004-0
DWG NO.	181-00747:004-0

UBE UBE INDUSTRIES, LTD.

FDC1. D080 A. Z

A1 UBE YAMAGUCHI JAPAN 図面区分 A1E03